CONEK

PNEUMATIC FITTINGS

CONEK PNEUMATIC

ONE-TOUCH TUBE FITTINGS

Features

One-touch tube fittings are used in pneumatic piping.
The tube fittings come in a wide variety of models to meet all your needs in pneumatic piping.
Even after installation, the direction of the tube can be changed freely.
Nickel-pated metal body ensures anti-corrosion and anti-contamination.
All R and NPT threads are pre-coated sealant.

Construction

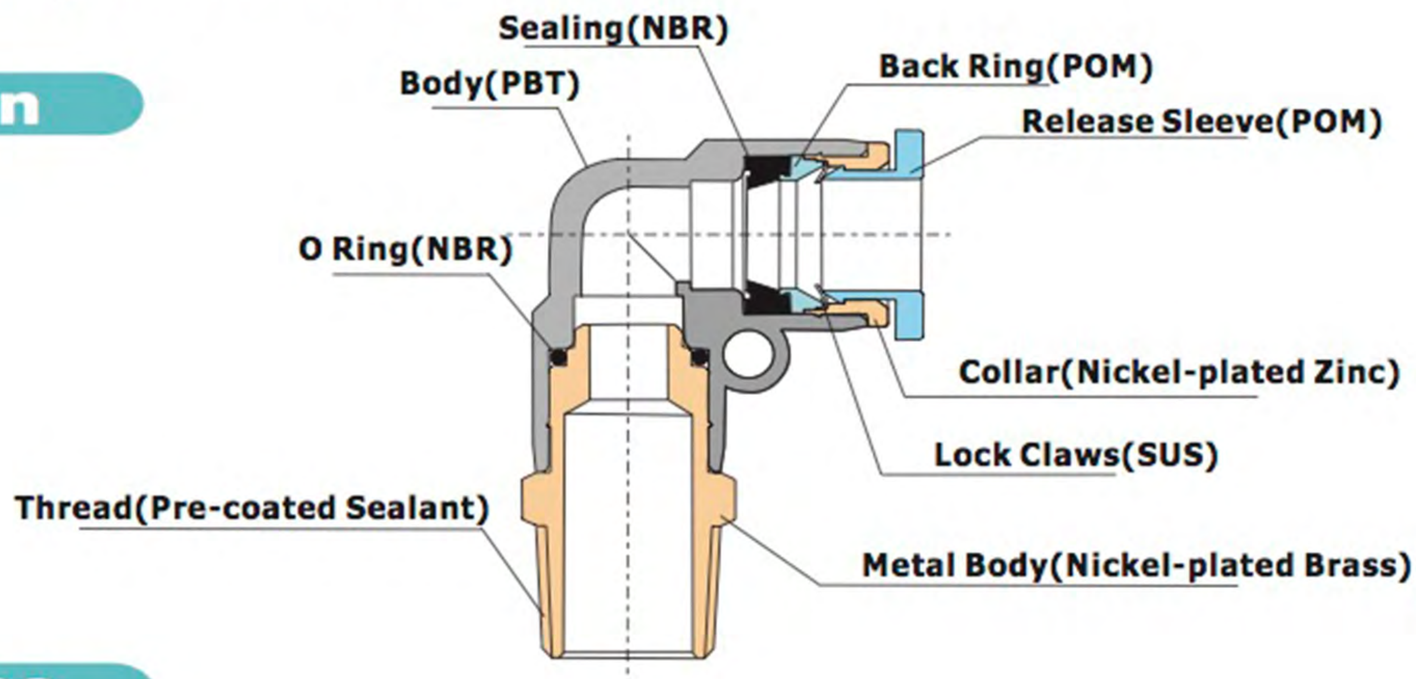

Specifications

Fluid Type	Air (No other type of gas or liquid)	
Working Pressure Range	0~150PSI	0~9.9KgF/cm²(0~990KPa)
Negative Pressure	-29.5 in Hg	-750mm Hg(10 Torr)
Working Temperature	32~140°F	0~60°C

Model Designation

PC	06	—	01	
(1)	(2)		(3)	(4)

(1) Model Type

(2) Tube Outer Dia

	Metric Tube					
Code	04	06	08	10	12	16
Size(mm)	Ø4	Ø6	Ø8	Ø10	Ø12	Ø16

	Inch Tube					
Code	5/32	3/16	1/4	5/16	3/8	1/2
Size(in)	Ø5/32	Ø3/16	Ø1/4	Ø5/16	Ø3/8	Ø1/2

(3) Tread Size

	Metric Thread(mm)		Taper Pipe Thread			
Code	M5	M6	01	02	03	04
Size	M5x0.8	M6x1.0	R1/8	R1/4	R3/8	R1/2

	UNF Thread	American Standard Taper Pipe Thread			
Code	U	N1	N2	N3	N4
Size	10-32UNF	NPT1/8	NPT1/4	NPT3/8	NPT1/2

When (2) is thread size, choose thread size from (3). When (3) is tube diameter, choose tube diameter from(2).

(4) Body Color Code

No Code: Black Color
C:Grey Color

PC

MODEL(ØD-T)							
Tube(Metric)-Thread(R)			Tube(Inch)-Thread(R)		Tube(Inch)-Thread(NPT)		
PC 04-M5	PC 06-04	PC 12-02	PC 1/4-01	PC 3/8-04	PC 5/32-U	PC 1/4-N2	PC 1/2-N2
PC 04-M6	PC 08-01	PC 12-03	PC 1/4-02	PC 1/2-02	PC 5/32-N1	PC 1/4-N3	PC 1/2-N3
PC 04-01	PC 08-02	PC 12-04	PC 1/4-03	PC 1/2-03	PC 5/32-N2	PC 5/16-N1	PC 1/2-N4
PC 04-02	PC 08-03	PC 16-03	PC 5/16-01	PC 1/2-04	PC 3/16-U	PC 5/16-N2	
PC 06-M5	PC 08-04	PC 16-04	PC 5/16-02		PC 3/16-N1	PC 5/16-N3	
PC 06-M6	PC 10-01		PC 5/16-03		PC 3/16-N2	PC 3/8-N1	
PC 06-01	PC 10-02		PC 3/8-01		PC 3/16-N3	PC 3/8-N2	
PC 06-02	PC 10-03		PC 3/8-02		PC 1/4-U	PC 3/8-N3	
PC 06-03	PC 10-04		PC 3/8-03		PC 1/4-N1	PC 3/8-N4	

POC

MODEL(ØD-T)					
Tube(Metric)-Thread(R)			Tube(Inch)-Thread(R)	Tube(Inch)-Thread(NPT)	
POC 04-M5	POC 08-01	POC 12-03	POC 1/4-01	POC 5/32-U	POC 3/8-N3
POC 04-M6	POC 08-02	POC 12-04	POC 1/4-02	POC 5/32-N1	POC 3/8-N4
POC 04-01	POC 08-03		POC 5/16-01	POC 1/4-U	POC 1/2-N2
POC 04-02	POC 08-04		POC 5/16-02	POC 1/4-N1	POC 1/2-N3
POC 06-M5	POC 10-01		POC 5/16-03	POC 1/4-N2	POC 1/2-N4
POC 06-M6	POC 10-02		POC 3/8-02	POC 5/16-N1	
POC 06-01	POC 10-03		POC 3/8-03	POC 5/16-N2	
POC 06-02	POC 10-04		POC 3/8-04	POC 5/16-N3	
POC 06-03	POC 12-02			POC 3/8-N2	

PCF

MODEL(ØD-T)				
Tube(Metric)-Thread(Rc)		Tube(Inch)-Thread(Rc)	Tube(Inch)-Thread(NPT)	
PCF 04-01	PCF 10-01	PCF 1/4-01	PCF 5/32-N1	PCF 3/8-N2
PCF 04-02	PCF 10-02	PCF 1/4-02	PCF 5/32-N2	PCF 3/8-N3
PCF 06-01	PCF 10-03	PCF 5/16-01	PCF 3/16-N1	PCF 1/2-N2
PCF 06-02	PCF 10-04	PCF 5/16-02	PCF 3/16-N2	PCF 1/2-N3
PCF 06-03	PCF 12-02	PCF 3/8-02	PCF 1/4-N1	
PCF 08-01	PCF 12-03	PCF 3/8-03	PCF 1/4-N2	
PCF 08-02	PCF 12-04		PCF 5/16-N1	
PCF 08-03			PCF 5/16-N2	
PCF 08-04			PCF 5/16-N3	

PL

MODEL(ØD-T)							
Tube(Metric)-Thread(R)			Tube(Inch)-Thread(R)		Tube(Inch)-Thread(NPT)		
PL 04-M5	PL 06-04	PL 12-02	PL 1/4-01	PL 3/8-04	PL 5/32-U	PL 1/4-N2	PL 1/2-N2
PL 04-M6	PL 08-01	PL 12-03	PL 1/4-02	PL 1/2-02	PL 5/32-N1	PL 1/4-N3	PL 1/2-N3
PL 04-01	PL 08-02	PL 12-04	PL 1/4-03	PL 1/2-03	PL 5/32-N2	PL 5/16-N1	PL 1/2-N4
PL 04-02	PL 08-03	PL 16-03	PL 5/16-01	PL 1/2-04	PL 3/16-U	PL 5/16-N2	
PL 06-M5	PL 08-04	PL 16-04	PL 5/16-02		PL 3/16-N1	PL 5/16-N3	
PL 06-M6	PL 10-01		PL 5/16-03		PL 3/16-N2	PL 3/8-N1	
PL 06-01	PL 10-02		PL 3/8-01		PL 3/16-N3	PL 3/8-N2	
PL 06-02	PL 10-03		PL 3/8-02		PL 1/4-U	PL 3/8-N3	
PL 06-03	PL 10-04		PL 3/8-03		PL 1/4-N1	PL 3/8-N4	

PLH

MODEL(ØD-T)							
Tube(Metric)-Thread(R)			Tube(Inch)-Thread(R)		Tube(Inch)-Thread(NPT)		
PLH 04-M5	PLH 06-04	PLH 12-02	PLH 1/4-01	PLH 3/8-04	PLH 5/32-U	PLH 1/4-N2	PLH 1/2-N2
PLH 04-M6	PLH 08-01	PLH 12-03	PLH 1/4-02	PLH 1/2-02	PLH 5/32-N1	PLH 1/4-N3	PLH 1/2-N3
PLH 04-01	PLH 08-02	PLH 12-04	PLH 1/4-03	PLH 1/2-03	PLH 5/32-N2	PLH 5/16-N1	PLH 1/2-N4
PLH 04-02	PLH 08-03		PLH 5/16-01	PLH 1/2-04	PLH 3/16-U	PLH 5/16-N2	
PLH 06-M5	PLH 08-04		PLH 5/16-02		PLH 3/16-N1	PLH 5/16-N3	
PLH 06-M6	PLH 10-01		PLH 5/16-03		PLH 3/16-N2	PLH 3/8-N1	
PLH 06-01	PLH 10-02		PLH 3/8-01		PLH 3/16-N3	PLH 3/8-N2	
PLH 06-02	PLH 10-03		PLH 3/8-02		PLH 1/4-U	PLH 3/8-N3	
PLH 06-03	PLH 10-04		PLH 3/8-03		PLH 1/4-N1	PLH 3/8-N4	

PLL

MODEL(ØD-T)					
Tube(Metric)-Thread(R)			Tube(Inch)-Thread(R)	Tube(Inch)-Thread(NPT)	
PLL 04-M5	PLL 06-04	PLL 12-02	PLL 1/4-01	PLL 5/32-U	PLL 5/16-N2
PLL 04-M6	PLL 08-01	PLL 12-03	PLL 1/4-02	PLL 5/32-N1	PLL 5/16-N3
PLL 04-01	PLL 08-02	PLL 12-04	PLL 5/16-01	PLL 3/16-N1	PLL3/8-N2
PLL 04-02	PLL 08-03		PLL 5/16-02	PLL 3/16-N2	PLL 3/8-N3
PLL 06-M5	PLL 08-04		PLL 3/8-02	PLL 3/16-N3	PLL 3/8-N4
PLL 06-M6	PLL 10-01		PLL 3/8-03	PLL 1/4-N1	PLL 1/2-N2
PLL 06-01	PLL 10-02			PLL 1/4-N2	PLL 1/2-N3
PLL 06-02	PLL 10-03			PLL 1/4-N3	PLL 1/2-N4
PLL 06-03	PLL 10-04			PLL 5/16-N1	

PB

MODEL(ØD-T)							
Tube(Metric)-Thread(R)			Tube(Inch)-Thread(R)		Tube(Inch)-Thread(NPT)		
PB 04-M5	PB 06-04	PB 12-02	PB 1/4-01	PB 3/8-04	PB 5/32-U	PB 1/4-N2	PB 1/2-N2
PB 04-M6	PB 08-01	PB 12-03	PB 1/4-02	PB 1/2-02	PB 5/32-N1	PB 1/4-N3	PB 1/2-N3
PB 04-01	PB 08-02	PB 12-04	PB 1/4-03	PB 1/2-03	PB 5/32-N2	PB 5/16-N1	PB 1/2-N4
PB 04-02	PB 08-03	PB 16-03	PB 5/16-01	PB 1/2-04	PB 3/16-U	PB 5/16-N2	
PB 06-M5	PB 08-04	PB 16-04	PB 5/16-02		PB 3/16-N1	PB 5/16-N3	
PB 06-M6	PB 10-01		PB 5/16-03		PB 3/16-N2	PB 3/8-N1	
PB 06-01	PB 10-02		PB 3/8-01		PB 3/16-N3	PB 3/8-N2	
PB 06-02	PB 10-03		PB 3/8-02		PB 1/4-U	PB 3/8-N3	
PB 06-03	PB 10-04		PB 3/8-03		PB 1/4-N1	PB 3/8-N4	

PD

MODEL(ØD-T)							
Tube(Metric)-Thread(R)			Tube(Inch)-Thread(R)		Tube(Inch)-Thread(NPT)		
PD 04-M5	PD 06-04	PD 12-02	PD 1/4-01	PD 3/8-04	PD 5/32-U	PD 1/4-N2	PD 1/2-N2
PD 04-M6	PD 08-01	PD 12-03	PD 1/4-02	PD 1/2-02	PD 5/32-N1	PD 1/4-N3	PD 1/2-N3
PD 04-01	PD 08-02	PD 12-04	PD 1/4-03	PD 1/2-03	PD 5/32-N2	PD 5/16-N1	PD 1/2-N4
PD 04-02	PD 08-03		PD 5/16-01	PD 1/2-04	PD 3/16-U	PD 5/16-N2	
PD 06-M5	PD 08-04		PD 5/16-02		PD 3/16-N1	PD 5/16-N3	
PD 06-M6	PD 10-01		PD 5/16-03		PD 3/16-N2	PD 3/8-N1	
PD 06-01	PD 10-02		PD 3/8-01		PD 3/16-N3	PD 3/8-N2	
PD 06-02	PD 10-03		PD 3/8-02		PD 1/4-U	PD 3/8-N3	
PD 06-03	PD 10-04		PD 3/8-03		PD 1/4-N1	PD 3/8-N4	

PX

MODEL(ØD-T)							
Tube(Metric)-Thread(R)			Tube(Inch)-Thread(R)		Tube(Inch)-Thread(NPT)		
PX 04-M5	PX 06-04	PX 12-02	PX 1/4-01	PX 3/8-04	PX 5/32-U	PX 1/4-N2	PX 1/2-N2
PX 04-M6	PX 08-01	PX 12-03	PX 1/4-02	PX 1/2-02	PX 5/32-N1	PX 1/4-N3	PX 1/2-N3
PX 04-01	PX 08-02	PX 12-04	PX 1/4-03	PX 1/2-03	PX 5/32-N2	PX 5/16-N1	PX 1/2-N4
PX 04-02	PX 08-03		PX 5/16-01	PX 1/2-04	PX 3/16-U	PX 5/16-N2	
PX 06-M5	PX 08-04		PX 5/16-02		PX 3/16-N1	PX 5/16-N3	
PX 06-M6	PX 10-01		PX 5/16-03		PX 3/16-N2	PX 3/8-N1	
PX 06-01	PX 10-02		PX 3/8-01		PX 3/16-N3	PX 3/8-N2	
PX 06-02	PX 10-03		PX 3/8-02		PX 1/4-U	PX 3/8-N3	
PX 06-03	PX 10-04		PX 3/8-03		PX 1/4-N1	PX 3/8-N4	

PH

MODEL(ØD-T)					
Tube(Metric)-Thread(R)			Tube(Inch)-Thread(R)	Tube(Inch)-Thread(NPT)	
PH 04-M5	PH 08-01	PH 12-04	PH 1/4-M5	PH 5/32-U	PH 5/16-N3
PH 04-M6	PH 08-02		PH 1/4-01	PH 5/32-N1	PH 3/8-N2
PH 04-01	PH 08-03		PH 1/4-02	PH 3/16-U	PH 3/8-N3
PH 04-02	PH 08-04		PH 5/16-01	PH 3/16-N1	PH 1/2-N3
PH 06-M5	PH 10-02		PH 5/16-02	PH 3/16-N2	PH 1/2-N4
PH 06-M6	PH 10-03		PH 5/16-03	PH 1/4-N1	
PH 06-01	PH 10-04		PH 3/8-02	PH 1/4-N2	
PH 06-02	PH 12-02		PH 3/8-03	PH 5/16-N1	
PH 06-03	PH 12-03			PH 5/16-N2	

PHF

MODEL(ØD-T)					
Tube(Metric)-Thread(R)			Tube(Inch)-Thread(R)	Tube(Inch)-Thread(NPT)	
PHF 04-M5	PHF 08-01	PHF 12-04	PHF 1/4-M5	PHF 5/32-U	PHF 5/16-N3
PHF 04-M6	PHF 08-02		PHF 1/4-01	PHF 5/32-N1	PHF 3/8-N2
PHF 04-01	PHF 08-03		PHF 1/4-02	PHF 3/16-U	PHF 3/8-N3
PHF 04-02	PHF 08-04		PHF 5/16-01	PHF 3/16-N1	PHF 1/2-N3
PHF 06-M5	PHF 10-02		PHF 5/16-02	PHF 3/16-N2	PHF 1/2-N4
PHF 06-M6	PHF 10-03		PHF 5/16-03	PHF 1/4-N1	
PHF 06-01	PHF 10-04		PHF 3/8-02	PHF 1/4-N2	
PHF 06-02	PHF 12-02		PHF 3/8-03	PHF 5/16-N1	
PHF 06-03	PHF 12-03			PHF 5/16-N2	

PGJ

MODEL(ØD1-ØD2)		
Tube(Metric)	Tube(Metric)-Tube(Inch)	Tube(Inch)
PGJ 06-04	PGJ 08-1/4	PGJ 1/4-5/32
PGJ 08-04	PGJ 10-1/4	PGJ 5/16-5/32
PGJ 08-06	PGJ 10-5/16	PGJ 5/16-1/4
PGJ 10-06	PGJ 12-1/4	PGJ 3/8-1/4
PGJ 10-08	PGJ 12-5/16	PGJ 3/8-5/16
PGJ 12-06	PGJ 12-3/8	PGJ 1/2-1/4
PGJ 12-08		PGJ 1/2-5/16
PGJ 12-10		PGJ 1/2-3/8

PU

MODEL(ØD)	
Tube(Metric)	Tube(Inch)
PU 04	PU 5/32
PU 06	PU 3/16
PU 08	PU 1/ 4
PU 10	PU 5/16
PU 12	PU 3/ 8
PU 16	PU 1/ 2

PV

MODEL(ØD)	
Tube(Metric)	Tube(Inch)
PV 04	PV 5/32
PV 06	PV 3/16
PV 08	PV 1/ 4
PV 10	PV 5/16
PV 12	PV 3/ 8
PV 16	PV 1/ 2

PE

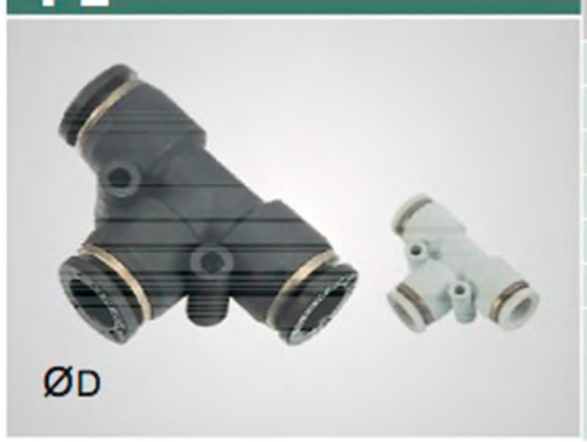

MODEL(ØD)	
Tube(Metric)	Tube(Inch)
PE 04	PE 5/32
PE 06	PE 3/16
PE 08	PE 1/ 4
PE 10	PE 5/16
PE 12	PE 3/ 8
PE 16	PE 1/ 2

PY

MODEL(ØD)	
Tube(Metric)	Tube(Inch)
PY 04	PY 5/32
PY 06	PY 3/16
PY 08	PY 1/ 4
PY 10	PY 5/16
PY 12	PY 3/ 8
	PY 1/ 2

PG

MODEL(ØD1-ØD2)	
Tube(Metric)	Tube(Inch)
PG 06-04	PG 3/16-5/32
PG 08-06	PG 1/4-5/32
PG 10-08	PG 1/4-3/16
PG 12-10	PG 5/16-1/4
PG 16-12	PG 3/8-5/16
	PG 1/2-3/8

PW

MODEL(ØD1-ØD2)	
Tube(Metric)	Tube(Inch)
PW 06-04	PW 3/16-5/32
PW 08-06	PW 1/4-5/32
PW 10-08	PW 1/4-3/16
PW 12-10	PW 5/16-1/4
	PW 3/8-5/16
	PW 1/2-3/8

PEG

MODEL(ØD1-ØD2)	
Tube(Metric)	Tube(Inch)
PEG 06-04	PEG 1/4-5/32
PEG 08-06	PEG 5/16-1/4
PEG 10-08	PEG 3/8-5/16
PEG 12-10	PEG 1/2-3/8
PEG 16-12	

PM

MODEL(ØD)	
Tube(Metric)	Tube(Inch)
PM 04	PM 5/32
PM 06	PM 3/16
PM 08	PM 1/ 4
PM 10	PM 5/16
PM 12	PM 3/ 8
	PM 1/ 2

PLF

MODEL(ØD-T)				
Tube(Metric)-Thread(Rc)			Tube(Inch)-Thread(NPT)	
PLF 04-M5	PLF 08-01	PLF 12-03	PLF 5/32-N1	PLF 3/8-N3
PLF 04-M6	PLF 08-02	PLF 12-04	PLF 3/16-N1	PLF 1/2-N3
PLF 04-01	PLF 08-03		PLF 3/16-N2	PLF 1/2-N4
PLF 04-02	PLF 08-04		PLF 1/4-N1	
PLF 06-M5	PLF 10-01		PLF 1/4-N2	
PLF 06-M6	PLF 10-02		PLF 5/16-N1	
PLF 06-01	PLF 10-03		PLF 5/16-N2	
PLF 06-02	PLF 10-04		PLF 5/16-N3	
PLF 06-03	PLF 12-02		PLF 3/8-N2	

PMF

MODEL(ØD-T)			
Tube(Metric)-Thread(Rc)		Tube(Inch)-Thread(NPT)	
PMF 04-01	PMF 10-01	PMF 5/32-N1	PMF 3/8-N3
PMF 04-02	PMF 10-02	PMF 3/16-N1	PMF 1/2-N3
PMF 06-01	PMF 10-03	PMF 3/16-N2	PMF 1/2-N4
PMF 06-02	PMF 10-04	PMF 1/4-N1	
PMF 06-03	PMF 12-02	PMF 1/4-N2	
PMF 08-01	PMF 12-03	PMF 5/16-N1	
PMF 08-02	PMF 12-04	PMF 5/16-N2	
PMF 08-03		PMF 5/16-N3	
PMF 08-04		PMF 3/8-N2	

PZA

MODEL(ØD)	
Tube(Metric)	Tube(Inch)
PZA 04	PZA 5/32
PZA 06	PZA 3/16
PZA 08	PZA 1/ 4
PZA 10	PZA 5/16
PZA 12	PZA 3/ 8
	PZA 1/ 2

PP

MODEL(ØD)	
Tube(Metric)	Tube(Inch)
PP 04	PP 5/32
PP 06	PP 3/16
PP 08	PP 1/ 4
PP 10	PP 5/16
PP 12	PP 3/ 8
PP 16	PP 1/ 2

PLJ

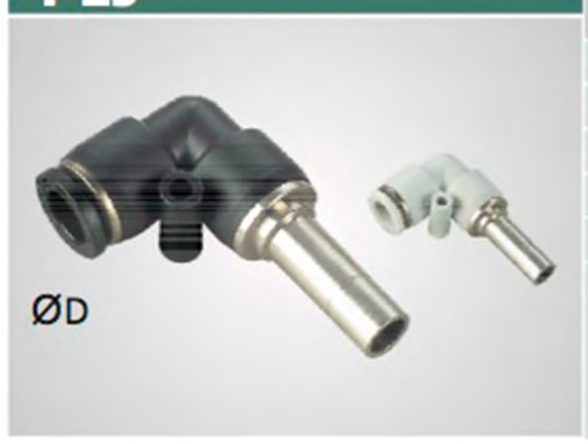

MODEL(ØD)	
Tube(Metric)	Tube(Inch)
PLJ 04	PLJ 5/32
PLJ 06	PLJ 3/16
PLJ 08	PLJ 1/ 4
PLJ 10	PLJ 5/16
PLJ 12	PLJ 3/ 8
	PLJ 1/ 2

PLGJ

MODEL(ØD1-ØD2)	
Tube(Metric)	Tube(Inch)
PLGJ 06-04	PLGJ 3/16-5/32
PLGJ 08-06	PLGJ 1/4-5/32
PLGJ 10-08	PLGJ 1/4-3/16
PLGJ 12-10	PLGJ 5/16-1/4
	PLGJ 3/8-5/16
	PLGJ 1/2-3/8

PYJ

MODEL(ØD)	
Tube(Metric)	Tube(Inch)
PYJ 04	PYJ 5/32
PYJ 06	PYJ 3/16
PYJ 08	PYJ 1/ 4
PYJ 10	PYJ 5/16
PYJ12	PYJ 3/ 8
	PYJ 1/ 2

PWJ

MODEL(ØD1-ØD2)	
Tube(Metric)	Tube(Inch)
PWJ 06-04	PWJ 1/4-5/32
PWJ 08-06	PWJ 5/16-1/4
PWJ 10-08	PWJ 3/8-5/16
PWJ 12-10	PWJ 1/2-3/8

PIJ

MODEL(ØD)	
Tube(Metric)	Tube(Inch)
PIJ 04	PIJ 5/32
PIJ 06	PIJ 3/16
PIJ 08	PIJ 1/ 4
PIJ 10	PIJ 5/16
PIJ 12	PIJ 3/ 8
PIJ 16	PIJ 1/ 2

PIG

MODEL(ØD1-ØD2)	
Tube(Metric)	Tube(Inch)
PIG 06-04	PIG 3/16-5/32
PIG 08-06	PIG 1/4-5/32
PIG 10-08	PIG 1/4-3/16
PIG 12-10	PIG 5/16-1/4
PIG 16-12	PIG 3/8-5/16
	PIG 1/2-3/8

PKD

MODEL(ØD1-ØD2-T)	
Tube(Metric)	Tube(Inch)
PKD 06-04-01	PKD 3/16-5/32-N1
PKD 08-04-02	PKD 1/4-5/32-N1
PKD 08-06-02	PKD 5/16-5/32-N2
PKD 10-08-03	PKD 5/16-3/16-N2
	PKD 5/16-1/4-N2
	PKD 3/8-5/16-N3

PK

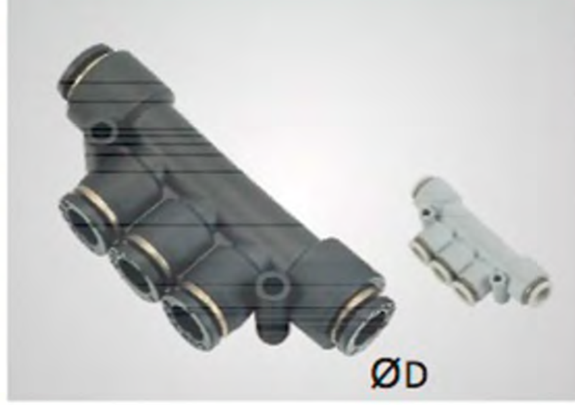

MODEL(ØD)	
Tube(Metric)	Tube(Inch)
PK 04	PK 5/32
PK 06	PK 3/16
PK 08	PK 1/ 4
	PK 5/16

PKG

MODEL(ØD1-ØD2)	
Tube(Metric)	Tube(Inch)
PKG 06-04	PKG 3/16-5/32
PKG 08-04	PKG 1/4-5/32
PKG 08-06	PKG 5/16-5/32
PKG 10-06	PKG 5/16-3/16
PKG 10-08	PKG 5/16-1/4
	PKG 3/8-1/4
	PKG 3/8-5/16

PKJ

MODEL(ØD1-ØD2)	
Tube(Metric)	Tube(Inch)
PKJ 06-04	PKJ 3/16-5/32
PKJ 08-04	PKJ 1/4-5/32
PKJ 08-06	PKJ 5/16-5/32
PKJ 10-06	PKJ 5/16-3/16
PKJ 10-08	PKJ 5/16-1/4
	PKJ 3/8-1/4
	PKJ 3/8-5/16

TUBE FITTINGS WITH G THREAD (O-RING)

PC-G

MODEL(ØD-T)	
Tube(Metric)-Thread(G)	
PC 04-G01	PC 10-G01
PC 04-G02	PC 10-G02
PC 06-G01	PC 10-G03
PC 06-G02	PC 10-G04
PC 06-G03	PC 12-G02
PC 06-G04	PC 12-G03
PC 08-G01	PC 12-G04
PC 08-G02	PC 16-G03
PC 08-G03	PC 16-G04
PC 08-G04	

PL-G

MODEL(ØD-T)	
Tube(Metric)-Thread(G)	
PL 04-G01	PL 10-G01
PL 04-G02	PL 10-G02
PL 06-G01	PL 10-G03
PL 06-G02	PL 10-G04
PL 06-G03	PL 12-G02
PL 06-G04	PL 12-G03
PL 08-G01	PL 12-G04
PL 08-G02	PL 16-G03
PL 08-G03	PL 16-G04
PL 08-G04	

PB-G

MODEL(ØD-T) Tube(Metric)-Thread(G)	
PB 04-G01	PB 10-G01
PB 04-G02	PB 10-G02
PB 06-G01	PB 10-G03
PB 06-G02	PB 10-G04
PB 06-G03	PB 12-G02
PB 06-G04	PB 12-G03
PB 08-G01	PB 12-G04
PB 08-G02	PB 16-G03
PB 08-G03	PB 16-G04
PB 08-G04	

PD-G

MODEL(ØD-T) Tube(Metric)-Thread(G)	
PD 04-G01	PD 10-G01
PD 04-G02	PD 10-G02
PD 06-G01	PD 10-G03
PD 06-G02	PD 10-G04
PD 06-G03	PD 12-G02
PD 06-G04	PD 12-G03
PD 08-G01	PD 12-G04
PD 08-G02	
PD 08-G03	
PD 08-G04	

PLH-G

MODEL(ØD-T) Tube(Metric)-Thread(G)	
PLH 04-G01	PLH 10-G01
PLH 04-G02	PLH 10-G02
PLH 06-G01	PLH 10-G03
PLH 06-G02	PLH 10-G04
PLH 06-G03	PLH 12-G02
PLH 06-G04	PLH 12-G03
PLH 08-G01	PLH 12-G04
PLH 08-G02	
PLH 08-G03	
PLH 08-G04	

PLL-G

MODEL(ØD-T) Tube(Metric)-Thread(G)	
PLL 04-G01	PLL 10-G01
PLL 04-G02	PLL 10-G02
PLL 06-G01	PLL 10-G03
PLL 06-G02	PLL 10-G04
PLL 06-G03	PLL 12-G02
PLL 06-G04	PLL 12-G03
PLL 08-G01	PLL 12-G04
PLL 08-G02	
PLL 08-G03	
PLL 08-G04	

PX-G

MODEL(ØD-T) Tube(Metric)-Thread(G)	
PX 04-G01	PX 10-G01
PX 04-G02	PX 10-G02
PX 06-G01	PX 10-G03
PX 06-G02	PX 10-G04
PX 06-G03	PX 12-G02
PX 06-G04	PX 12-G03
PX 08-G01	PX 12-G04
PX 08-G02	
PX 08-G03	
PX 08-G04	

PKD-G

MODEL(ØD1-ØD2-T) Tube(Metric)-Thread(G)
PKD 06-04-G01
PKD 08-04-G02
PKD 08-06-G02
PKD 10-08-G03

PH-G

MODEL(ØD-T) Tube(Metric)-Thread(G)
PH 04-G01
PH 06-G01
PH 06-G02
PH 08-G01
PH 08-G02
PH 08-G03
PH 10-G02
PH 10-G03
PH 12-G03
PH 12-G04

PHF-G

MODEL(ØD-T) Tube(Metric)-Thread(G)
PHF 04-G01
PHF 06-G01
PHF 06-G02
PHF 08-G01
PHF 08-G02
PHF 08-G03
PHF 10-G02
PHF 10-G03
PHF 12-G03
PHF 12-G04

PCF-G

MODEL(ØD-T) Tube(Metric)-Thread(G)	
PCF 04-G01	PCF 10-G02
PCF 04-G02	PCF 10-G03
PCF 06-G01	PCF 10-G04
PCF 06-G02	PCF 12-G02
PCF 06-G03	PCF 12-G03
PCF 08-G01	PCF 12-G04
PCF 08-G02	
PCF 08-G03	
PCF 08-G04	
PCF 10-G01	

PLF-G

MODEL(ØD-T) Tube(Metric)-Thread(G)	
PLF 04-G01	PLF 10-G02
PLF 04-G02	PLF 10-G03
PLF 06-G01	PLF 10-G04
PLF 06-G02	PLF 12-G02
PLF 06-G03	PLF 12-G03
PLF 08-G01	PLF 12-G04
PLF 08-G02	
PLF 08-G03	
PLF 08-G04	
PLF 10-G01	

SPEED CONTROLLERS

Features

Accurate regulation of an optimal airflow rate for precise motion control.
The compact design provides the comparable range of speed as the larger ones do.
Control-out and control-in types are available for all models.
All R and NPT threads are pre-coated sealant.

Construction

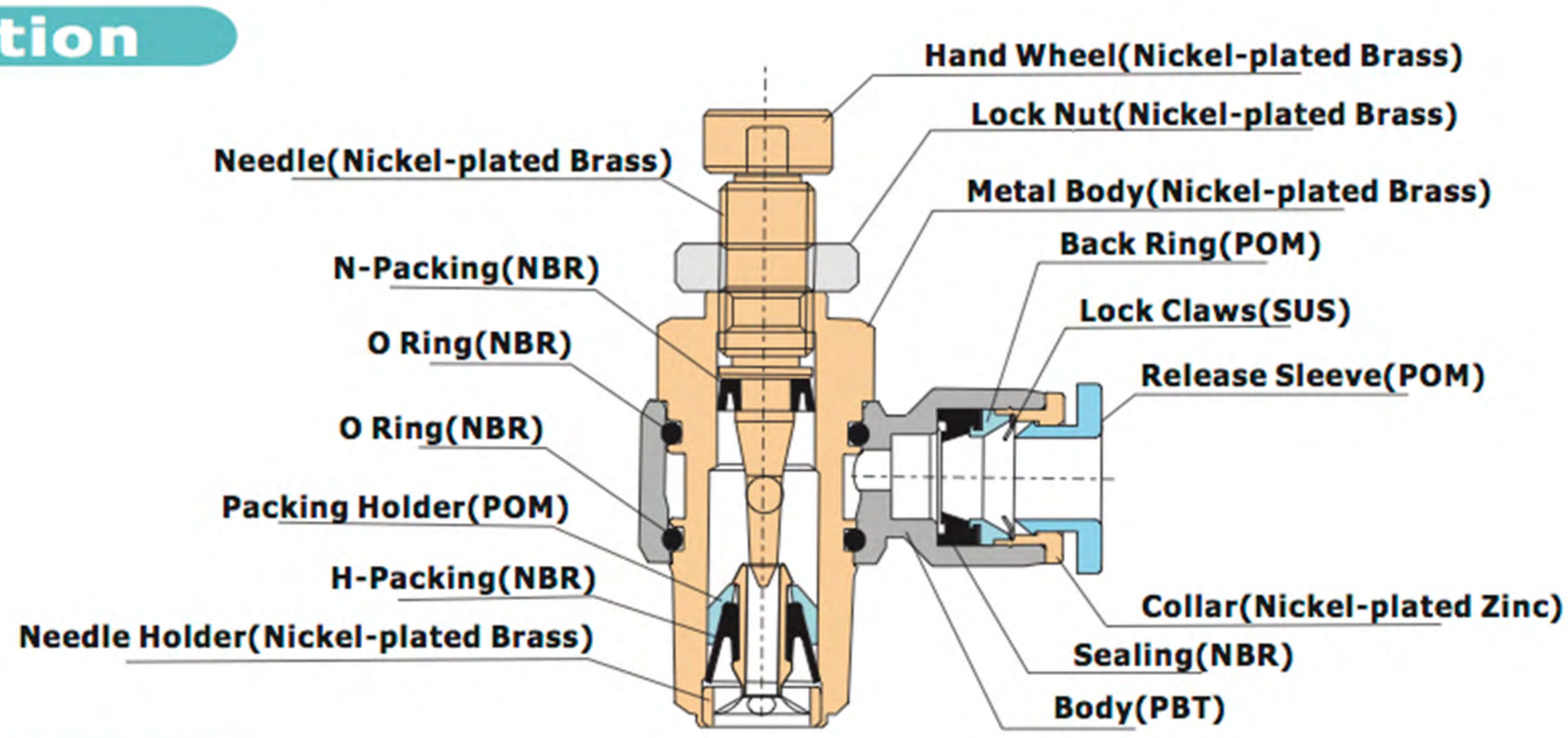

Specifications

Fluid Type	Air (No other type of gas or liquid)	
Working Pressure Range	0~150PSI	0~9.9KgF/cm^2(0~990KPa)
Negative Pressure	-29.5 in Hg	-750mm Hg(10 Torr)
Working Temperature	32~140°F	0~60°C

JSC

MODEL(ØD-T)						
Tube(Metric)-Thread(R)			Tube(Inch)-Thread(R)	Tube(Inch)-Thread(NPT)		
JSC 04-M5	JSC 08-02	JSC 12-04	JSC 1/4-M5	JSC 5/32-U	JSC 1/4-N3	JSC 1/2-N4
JSC 04-01	JSC 08-03		JSC 1/4-01	JSC 5/32-N1	JSC 5/16-N1	
JSC 04-02	JSC 08-04		JSC 1/4-02	JSC 3/16-U	JSC 5/16-N2	
JSC 06-M5	JSC 10-01		JSC 5/16-01	JSC 3/16-N1	JSC 5/16-N3	
JSC 06-01	JSC 10-02		JSC 5/16-02	JSC 3/16-N2	JSC 5/16-N4	
JSC 06-02	JSC 10-03		JSC 5/16-03	JSC 3/16-N3	JSC 3/8-N2	
JSC 06-03	JSC 10-04		JSC 3/8-02	JSC 1/4-U	JSC 3/8-N3	
JSC 06-04	JSC 12-02		JSC 3/8-03	JSC 1/4-N1	JSC 3/8-N4	
JSC 08-01	JSC 12-03			JSC 1/4-N2	JSC 1/2-N3	

JSU

MODEL(ØD)	
Tube(Metric)	Tube(Inch)
JSU 04	JSU 5/32
JSU 06	JSU 3/16
JSU 08	JSU 1/ 4
JSU 10	JSU 5/16
JSU 12	JSU 3/ 8
	JSU 1/ 2

JSC-G

MODEL(ØD-T)	
Tube(Metric)-Thread(G)	
JSC 04-G01	JSC 08-G04
JSC 04-G02	JSC 10-G01
JSC 06-G01	JSC 10-G02
JSC 06-G02	JSC 10-G03
JSC 06-G03	JSC 10-G04
JSC 06-G04	JSC 12-G02
JSC 08-G01	JSC 12-G03
JSC 08-G02	JSC 12-G04
JSC 08-G03	

When you order control in type, please put B at the end of model type. For example, JSC 06-01B.

HAND VALVES

Features

The hand valves are designed to turn on and off the airflow.
Two-way and three-way valves are available for all models.
Three-way directional control valve releases the residual internal pressure on the output side when manually closed.
G-Thread type also available.

Construction

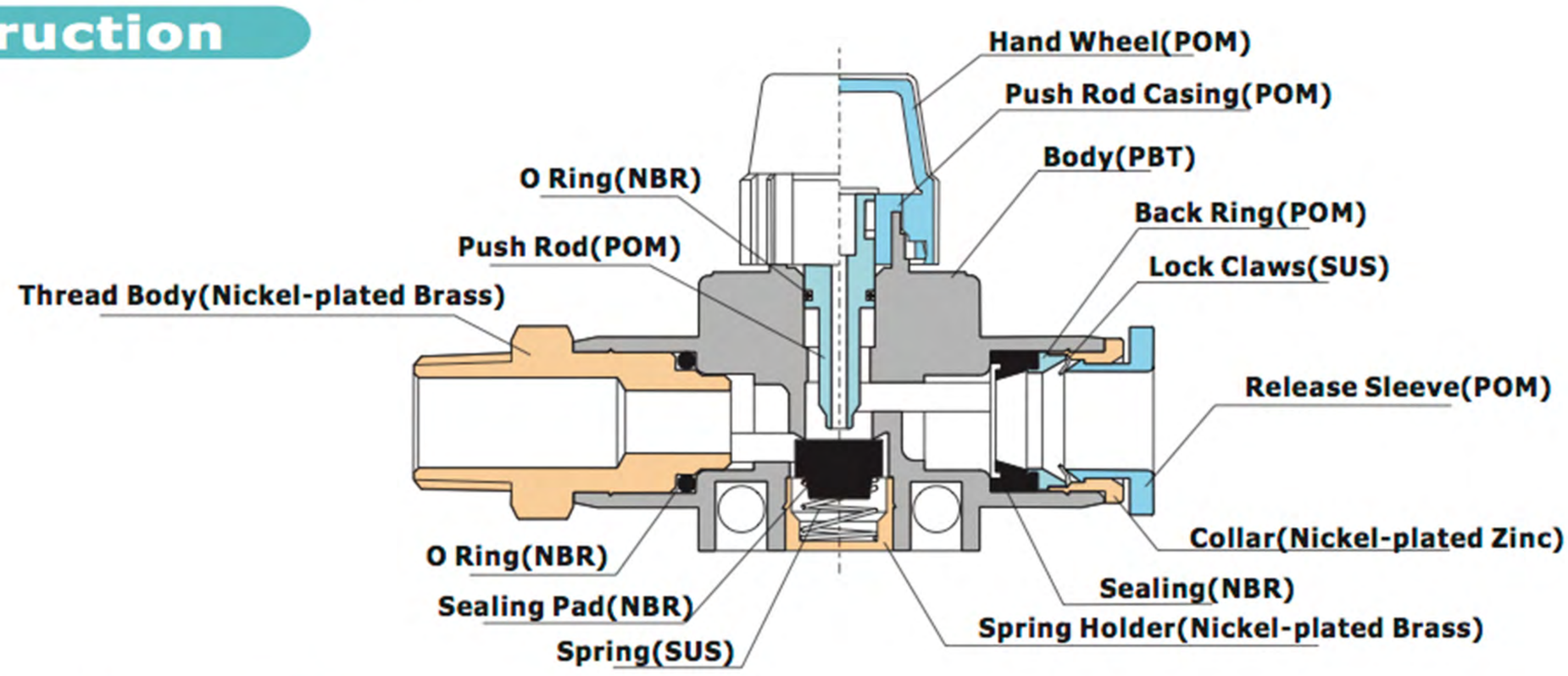

Specifications

Fluid Type	Air (No other type of gas or liquid)	
Working Pressure Range	0~150PSI	0~9.9KgF/cm²(0~990KPa)
Negative Pressure	-29.5 in Hg	-750mm Hg(10 Torr)
Working Temperature	32~140°F	0-60°C

HVFF

MODEL(ØD1-ØD2) Tube(Metric)-Tube(metric)
HVFF 06-06
HVFF 08-06
HVFF 08-08
HVFF 10-08
HVFF 10-10
HVFF 12-10
HVFF 12-12

HVSF

MODEL(T-ØD) Thread(R)-Tube(Metric)	
HVSF 01-06	HVSF 02-12
HVSF 02-06	HVSF 03-12
HVSF 03-06	HVSF 04-12
HVSF 01-08	
HVSF 02-08	
HVSF 03-08	
HVSF 02-10	
HVSF 03-10	
HVSF 04-10	

HVFS

MODEL(ØD-T) Tube(Metric)-Thread(R)	
HVFS 06-01	HVFS 12-02
HVFS 06-02	HVFS 12-03
HVFS 06-03	HVFS 12-04
HVFS 08-01	
HVFS 08-02	
HVFS 08-03	
HVFS 10-02	
HVFS 10-03	
HVFS 10-04	

HVSS

MODEL(T1-T2) Thread(R)-Thread(R)
HVSS 01-01
HVSS 02-01
HVSS 02-02
HVSS 03-02
HVSS 03-03
HVSS 04-03
HVSS 04-04

When you order two way valves, please put B at the end of model type. For example, HVFF06-06B.

SILENCERS

Features

This serial silencer is used to reduce the dynamic noise for the pneumatic components or device exhaust.
Compact design allows easy installation in a narrow space.

Model Designation

PSL	—	01
(1)		(2)

(1) Model Type

Code	PSL	BSL	BESL	BSLM
Model Type	Plastic Silencer	Brass Silencer	Exhaust Regulator	Brass Silencer Mini

(2) Thread Size

	Metric Thread						
Code	M5	01	02	03	04	06	08
Size	M5x0.8	R1/8	R1/4	R3/8	R1/2	R3/4	R1

BSL

MODEL(T) Thread(R)
BSL -M5
BSL -01
BSL -02
BSL -03
BSL -04
BSL -06
BSL -08

PSL

MODEL(T) Thread(R)
PSL -01
PSL -02
PSL -03
PSL -04

BESL

MODEL(T) Thread(R)
BESL -01
BESL -02
BESL -03
BESL -04
BESL -06
BESL -08

BSLM

MODEL(T) Thread(R)
BSLM -01
BSLM -02
BSLM -03
BSLM -04
BSLM -06
BSLM -08

CONEK

PNEUMATIC FITTINGS

CONEK

PNEUMATIC FITTINGS

CONEK PNEUMATIC .

Any information contained herein may be updated without prior notification.